会签栏

☐ 02

☐ 03

☐ 05

☐ 06

☐ 07

分发栏

☐ 02 ☐ 03
☐ 05 ☐ 06
☐ 07

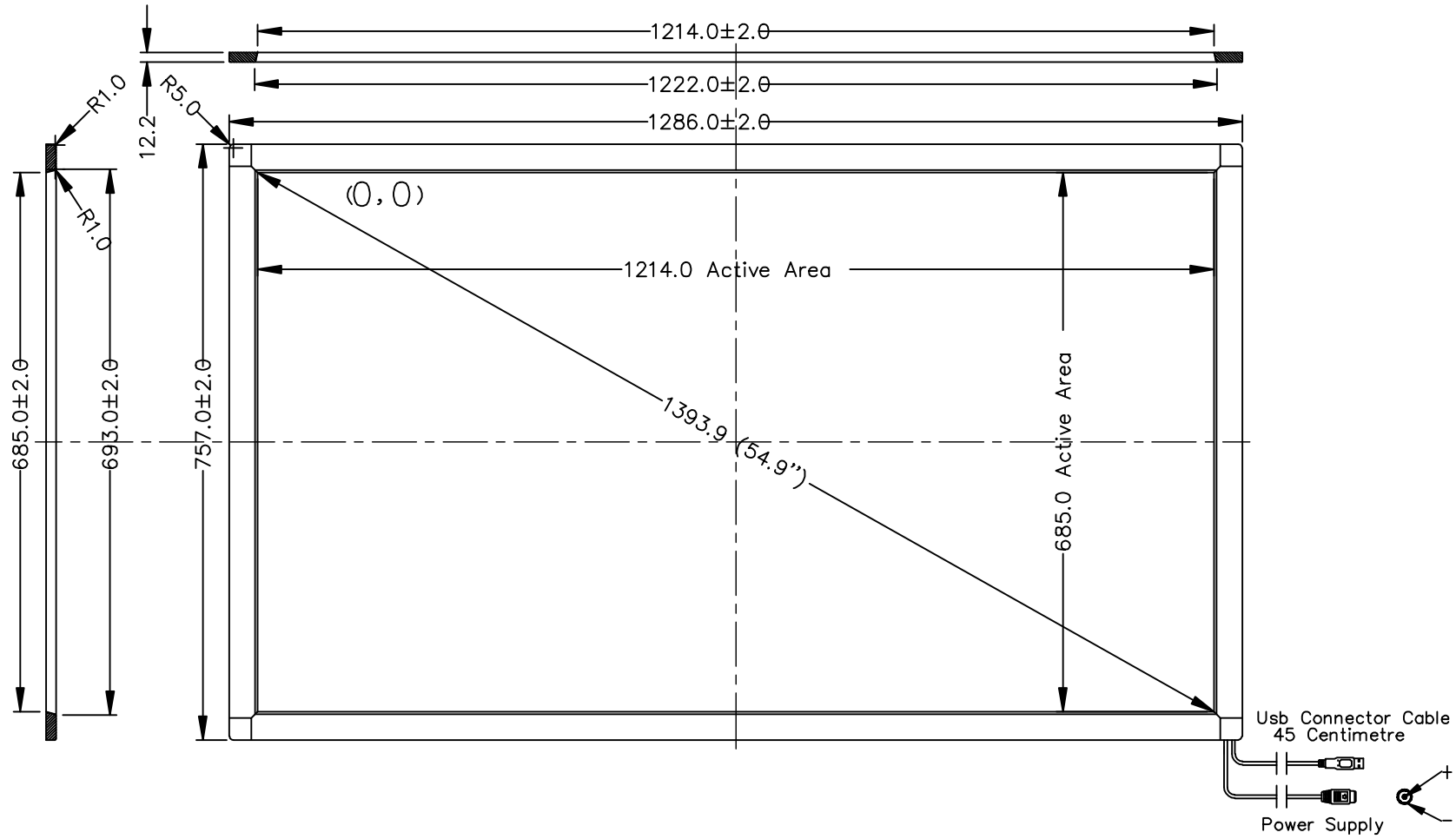

IRTOUCH SYSTEMS BEIJING IRTOUCHSYSTEMS CO., LTD			EXPLODE No:	Rev: A	PROJECTION
MATERIAL:	DO NOT SCALE DRAWING ALL DIMENSIONS ARE MM TOLERANCE: LINEAR TOL: .X=±1.0 .XX=±0.5 ANGULAR TOL: =±1.0°	PART No: L55		DRAW No:	
FINISH:		PART NAME: TOUCHSCREEN FOR 55"		SCALE: 1:1	
ACTION:	DESIGNER: DATE:	CHECKED: DATE:	APPROVED: DATE:	SHEET 1 OF 1	A4